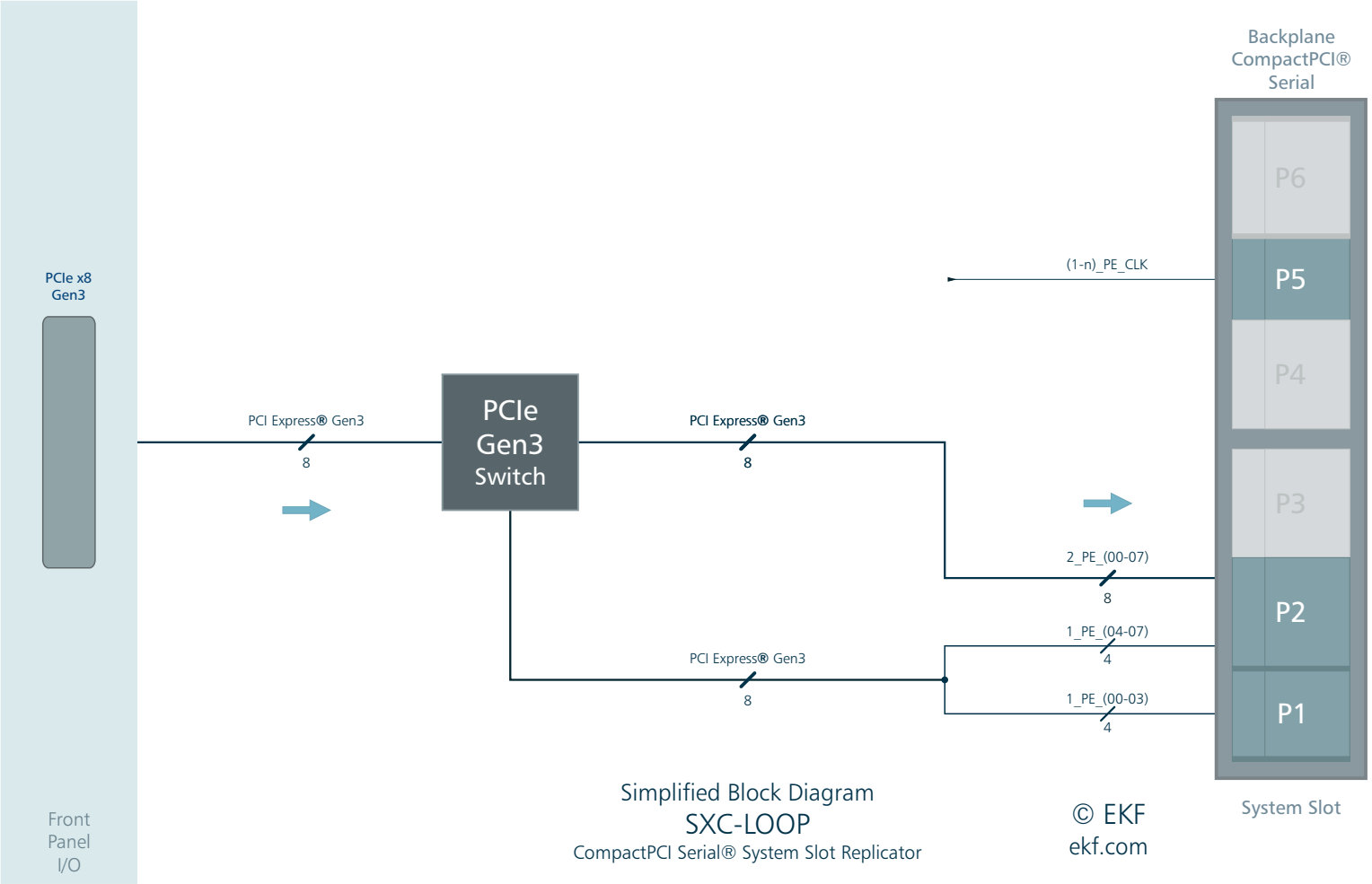

Simplified Block Diagram
SXC-LOOP
CompactPCI Serial® System Slot Replicator

© EKF
ekf.com